DRAWING No.: M506-5582042	IF IN DOUBT – ASK	©	NOT TO SCALE	THIRD ANGLE PROJECTION	ALL DIMENSIONS IN mm

OBSOLETE

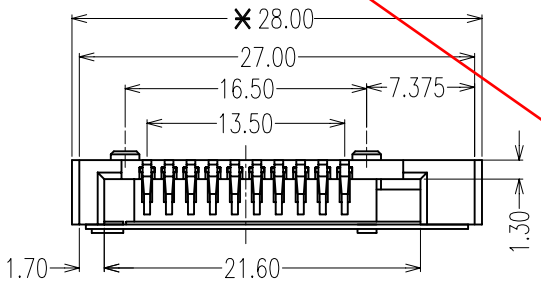

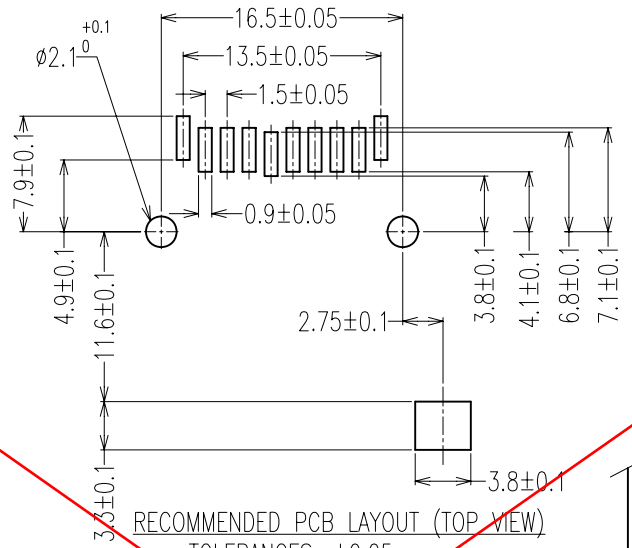

RECOMMENDED PCB LAYOUT (TOP VIEW)
TOLERANCES: ±0.05 mm

SPECIFICATIONS:
MATERIAL:–
INSULATOR: LCP, UL94V–0
CONTACT: PHOSPHOR BRONZE
FINISH:–
CONTACT: GOLD OVER NICKEL UNDERPLATE
SOLDER TAIL: TIN OVER NICKEL UNDERPLATE
ELECTRICAL:–
CURRENT RATING: 1 AMP MAX.
CONTACT RESISTANCE: 100 mΩ MAX.
INSULATION RESISTANCE: 1000 MΩ MIN.
MECHANICAL:–
DURABILITY: 5000 CYCLES MIN.
ENVIRONMENTAL:–
TEMPERATURE RANGE: –40°C TO + 85°C

NOTES: ALL DIMENSIONS AND NOTES MARKED ✱ ARE CRITICAL AND MUST BE CHECKED IN ACCORDANCE WITH QUALITY DOC. Q1–02A

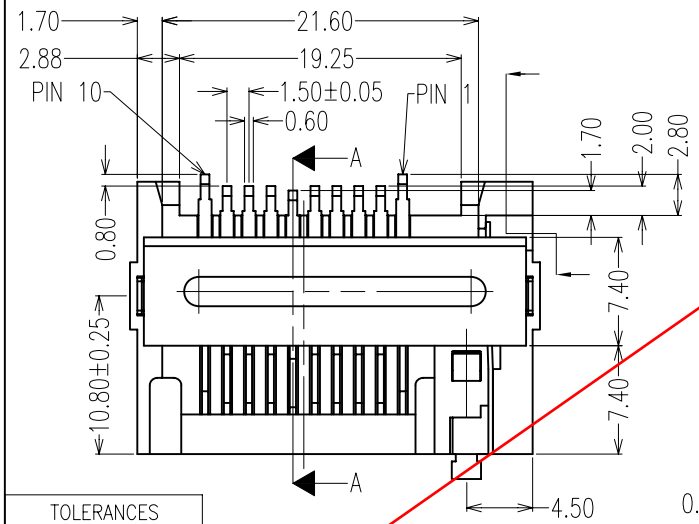

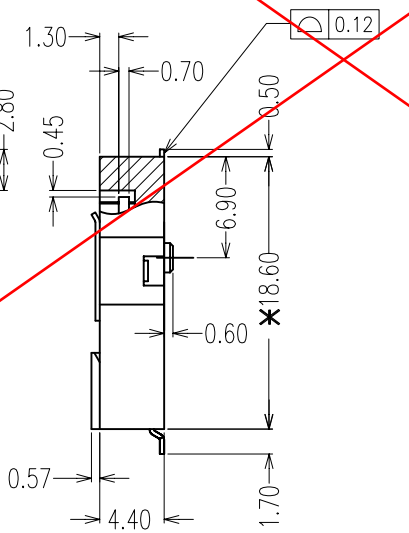

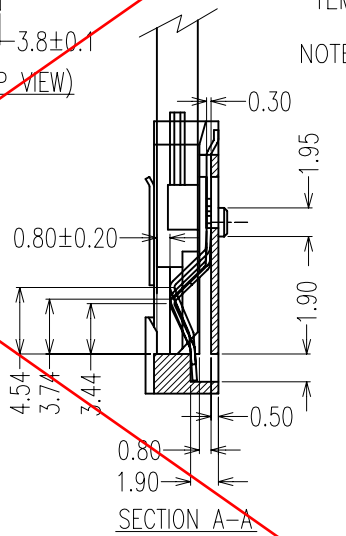

SECTION A–A

NAME	ISS.	DATE	C/NOTE
Allan	1	01.08.06	–

APPROVED:
CHECKED:
DRAWN: Allan
CUSTOMER REF.:
ASSEMBLY DRG:

TOLERANCES
X. = ±0.5mm
X.X = ±0.30mm
X.XX = ±0.20mm

HARWIN

HARWIN USA	HARWIN Europe (UK)	HARWIN Asia
TEL: 603 893 5376	TEL: 023 9231 4545	TEL: +65 6 779 4909
FAX: 603 893 5396	FAX: 023 9231 4590	FAX: +65 6 779 3868
mis@harwin.com	mis@harwin.co.uk	mis@harwin.com.sg

THIS DRAWING AND ANY INFORMATION OR DESCRIPTIVE MATTER SET OUT HEREON ARE CONFIDENTIAL AND COPYRIGHT PROPERTY OF THE HARWIN GROUP AND MUST NOT BE DISCLOSED, LOANED, COPIED OR USED FOR MANUFACTURING, TENDERING OR FOR ANY OTHER PURPOSE WITHOUT THEIR WRITTEN PERMISSION.

TOLERANCES
X. = ±1mm
X.X = ±0.25mm
X.XX = ±0.10mm
X.XXX = ±0.01mm
ANGLES = ±5°
UNLESS STATED

MATERIAL: SEE NOTES
FINISH: SEE NOTES
S/AREA: mm²

TITLE: MEMORY STICK SOCKET STANDARD

DRAWING NUMBER: M506-5582042

SHT 1 OF 1